FE-Reduction-Adapter-Plate

AD-reduzierbl 96
AD-reduzierbl144

Description

The Reduction-Adapter-Plate solves the veneering problem of stamped sheet metal differences in the exchange of the front chassis units of size 144x144 or 96x96 mm with holes of size 96x48 mm (e.g. Adamczewski FE-housings).

The accessories consist of the front plate with welded threaded bolts, the counterpart, nuts and washers.

Specification

Material:	2 mm steel sheet
Color:	RAL 7032
Threaded bolt / nut	M3,0

Connections and dimensions:
FE-Reduction-Adapter-Plate
144x144 auf 96x48mm
Type: AD-reduzierbl144

weight: 275 g

View from the rear

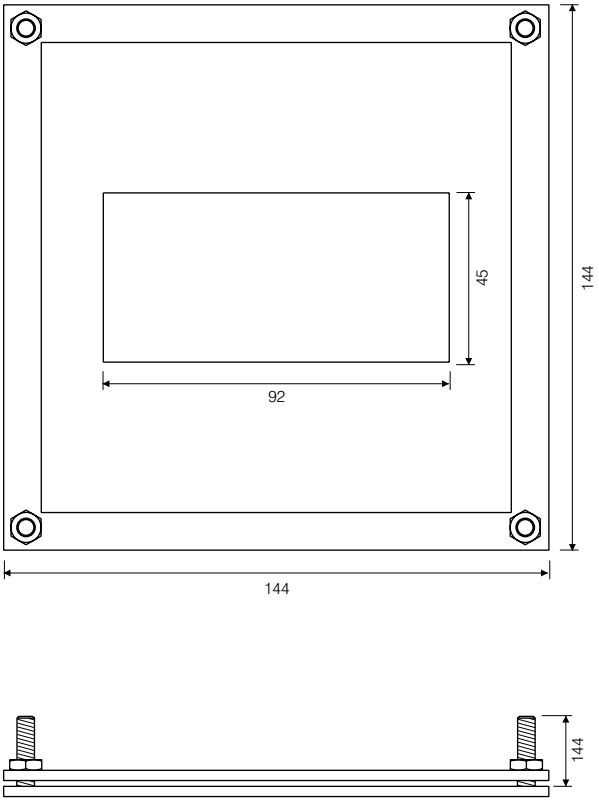

Connections and dimensions:
FE-Reduction-Adapter-Plate
96x96 auf 96x48mm
Type: AD-reduzierbl 96

weight: 180 g

View from the rear

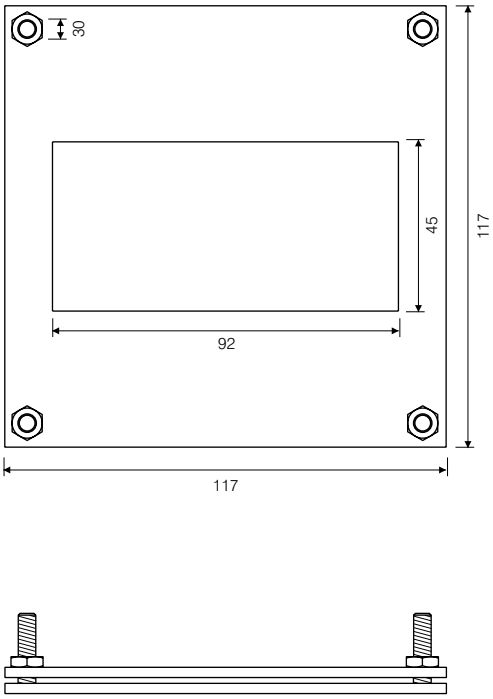

Printed 38/2015. We reserve the right for technical changes

ADAMCZEWSKI
Elektronische Messtechnik GmbH
Felix-Wankel-Straße 13 · 74374 Zaberfeld
Telefon 07046/875 · Telefax 07046/7678
vertrieb@ad-messtechnik.de·www.adamczewski.com