Special Functions

Incremental Setpoint Generator

AD-ISW 100 GS

Description

The incremental setpoint generator is used to preset an analog value (0 / 4–20 mA, 0–10 V) with the aid of external control signals. The output range from 0–100% is divided into 256 steps. The output change by one step is carried out by an input pulse of at least 64 ms in length. With a continuous signal, there is an automatic change approx. every 282 ms by one step (ramp function). An infinite ramp function when the signal direction is reversed at the range limits can be configured. Potential-free contacts as well as active voltages of 5–30 V DC can be used as input pulse sources. The signal setting can also be made with the two device buttons. Pressing both buttons at the same time for approx. 2 seconds saves the instantaneous value as the start value after a supply voltage failure. The storage process is acknowledged by blanking the operating voltage LED. There is a red LED for each signal direction input, which indicates the active input status. During the ramp function, the respective LED flashes according to the direction of change. The output signal is galvanically separated from the active inputs and also from the supply voltage.
The following can be configured using AD Studio software:
- Number of steps (2 ... 1000)
- Time interval per step (10 ... 2000 ms)
- Area limits
- Ramp function
- Signal start values

Application

Presetting of analog values by means of external control signals (contact or DC voltage).

Business data

Order number	AD-ISW 100 GS

Technical specifications

Contact	
Feeding voltage	5 V
Current limit	~ 3 mA
Input voltage	
Input level	0 / 5 ... 30 V
Input resistance	3 kOhm
Input signals	
Minimum pulse width	64 ms
Contact debouncing	50 ms
Ramp start	> 2000 ms
Step time	282 ms [1)]
Step size	1 / 256 [1)]
Output current	
Output range	0...20 mA; 4...20 mA [1)]
Max. burden	500 Ohm
Max. residual ripple	40 µAss
Open-circuit voltage	< 13 V
Output voltage	
Output range	0...10 V; 2...10 V [1)]
Min. burden	10 kOhm
Max. residual ripple	20 mVss
Current limit	< 40 mA
Supply	
Voltage range AC	50 ... 253 V AC, 50/60 Hz
Nominal voltage AC	230 V AC
Voltage range DC	20 ... 253 V DC
Nominal voltage DC	24 V DC
Input power AC/DC	1,7 VA / 0,8 W
Signal behavior	
Resolution	11 Bit
Basic accuracy	< 0,2 %
Temperature influence	100 ppm/K
Housing	
Dimensions (WxHxD)	23x78x103 mm
Type of protection	IP 20
Connection method	screw clamp
Terminals, wire cross section	2,5 mm² flex wire / 4 mm² one wire
Bolting torque terminals	0,5 Nm
Weight	~ 100 g
Manner of fastening	35 mm DIN rail 35mm
Environmental conditions	
Ambient temperature	-10 ... 50 °C
Storage and transport	-10 ... 70 °C (no condensation)

ADAMCZEWSKI
Elektronische Messtechnik GmbH
Felix-Wankel-Str. 13
74374 Zaberfeld
Tel. +49 (0)7046-875
Fax +49 (0)7046-7678
vertrieb@ad-messtechnik.de
www.adamczewski.com

Incremental Setpoint Generator

AD-ISW 100 GS

Technical specifications

EMC

Product family standard	EN 61326-1 [2]
Emitted interference	EN 55011, CISPR11 Cl. B, Gr. 1

Electrical safety requirements

Product family standard	EN 61010-1
Overvoltage category	II
Pollution degree	2

Galvanic isolation, test voltages

Contact / Output	no
Active input / Output	1,0 kV, 50 Hz (1 min.)
Signal / supply unit	3 kV, 50 Hz (1 min.)

Protection circuits

Input	electrical surge protection
Output	electrical surge protection
Power supply	Protection against overvoltage reverse polarity

1) In/Out signals can be configured with AD studio software.
2) Slight signal deviations are possible during interference.

Display and operating elements

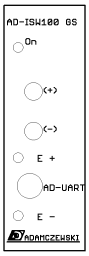

On Power supply LED (green)
lights up in normal operation
Blanking when signal storage
(+) Direction key for signal change
(-) Direction key for signal change
E(+) red LED for signal direction pulse
E(-) red LED for signal direction pulse
AD-UART Communication interface for configuration

Block and wiring diagram

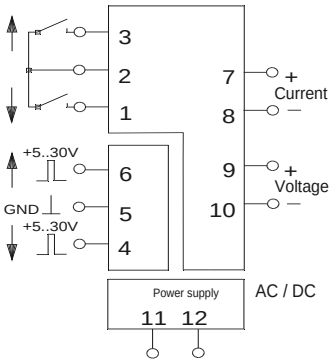

Dimensions