Isolation Converter

AD-TW 201 GS

AD-TW 202 GS

Description

The separation converter serves the galvanic separation of impressed currents. It obtains its auxiliary energy form the input signal. The device is available as a single-channel (AD-TW 201 GS) or dual-channel (AD-TW 202 GS) version. The connection of an additional auxiliary voltage is not necessary. The output current is independent of the connected load up to the maximum value. The isolating transformer is also available as a TWB variant, which does not interrupt the input current if its output current is interrupted (bypass function).

Application

Economic separation of computer inputs, protection of sensitive units against potential delay, galvanic decoupling in complex measuring units.

Business data

Order number

AD-TW 201 GS	one channel
AD-TW 202 GS	two channels
AD-TWB 201 GS	einkanalig mit Bypass
AD-TWB 202 GS	zweikanalig mit Bypass

Information

Downloads

Technical specifications

Input current	
Measuring range	4 ... 20 mA
Input voltage	< 25 V
Drop voltage	< 2,5 V
Oscillation current	< 80 µA
Output current	
Output range	4 ... 20 mA
Max. burden	500 Ohm
Burden error	-0,03% / 100 Ohm
Residual ripple	0,5 % (500 Ohm; 20 mA)
Transmission behaviour	
Basic accuracy	< 0,3 %
Input / output	1 : 1
Temperature influence	50 ppm/K
Response time	~ 20 ms
Transmission frequency	500 Hz (500 Ohm)
Housing	
Dimensions (WxHxD)	20x30x16,5 mm
Type of protection	IP 20
Connection method	screw clamp
Weight	max. 150 g
Environmental conditions	
Ambient temperature	-10 ... 50 °C
Storage and transport	-10 ... 70 °C (no condensation)
EMC	
Product family standard	EN 61326-1 [1]
Emitted interference	EN 55011, CISPR11 Cl. B, Gr. 1
Galvanic isolation	
Base isolation, functional separation	
Working voltage	50 V DC
Test voltages input / output	500 V, 50 Hz (1 min.)

[1] During checking, slight signal deviations are possible.

Printed 12.02.2024 We reserve the right for technical changes.

ADAMCZEWSKI
Elektronische Messtechnik GmbH
Felix-Wankel-Str. 13
74374 Zaberfeld
Tel. +49 (0)7046-875
Fax +49 (0)7046-7678
vertrieb@ad-messtechnik.de
www.adamczewski.com

Isolation Converter

AD-TW 201 GS

AD-TW 202 GS

Block and wiring diagram

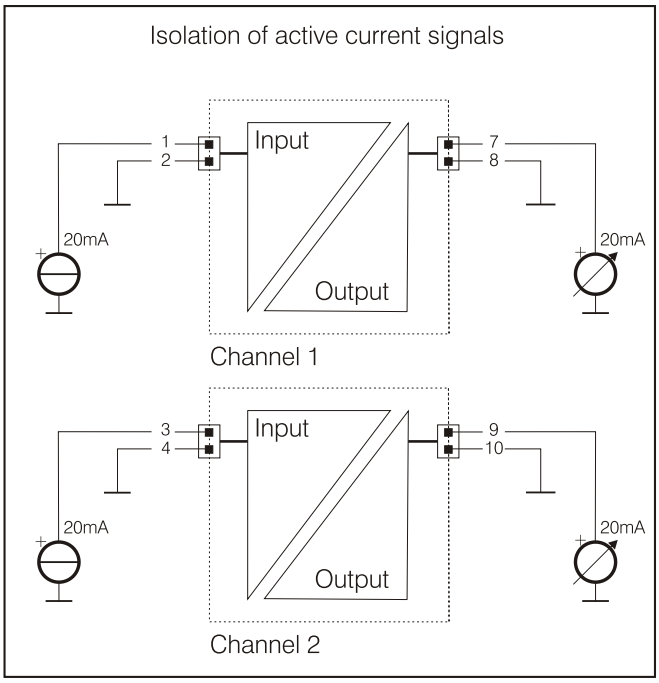

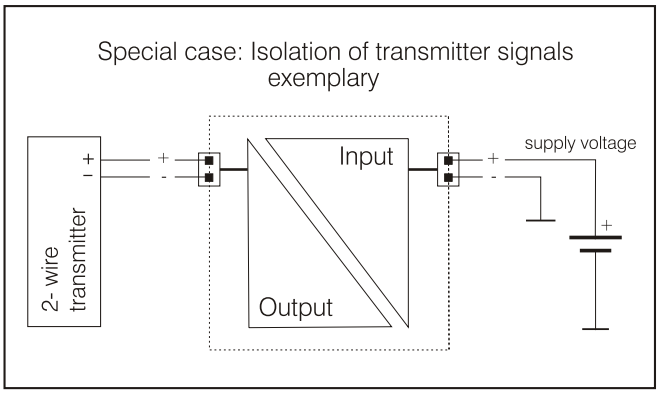
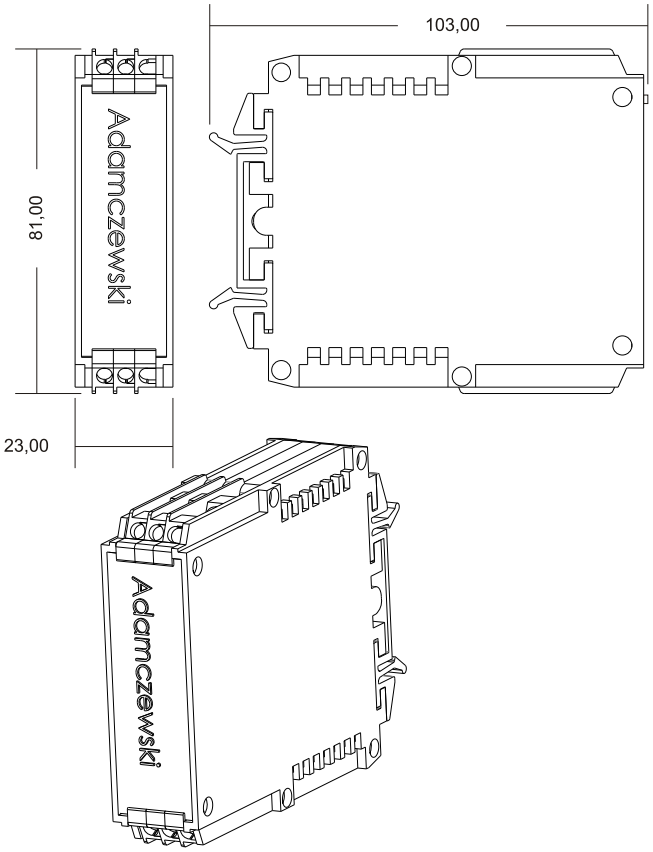
Dimensions